E/SEM I / CBSGS / Applied Maths / MAY 2018

Q. P. Code: 37722

(3 hours) **[Total Marks: 80]**

Note: i) Q.No 1 is compulsory
ii) Attempt any three from remaining.
ii) All questions carry equal marks.

Q.No.1) a)If tanhx = $\frac{2}{3}$, find the value of x and cosh2x. (3)

b) If u = $e^{ax} sinby$, prove that $\frac{\partial^2 u}{\partial x \partial y} = \frac{\partial^2 u}{\partial y \partial x}$ (3)

c) If $x = ucosv$, $y = usinv$, Prove that $JJ' = 1$ (3)

d) Prove that $\log(1 + sinx) = x - \frac{x^2}{2} + \frac{x^3}{6} + \cdots$ (3)

e) Show that every skew Hermitian matrix A can be uniquely expressed as P+iQ, where P is real skew symmetric & Q is real symmetric. (4)

f) Find nth derivative of $2^x sin^2 xcosx$ (4)

Q.No.2) a) If $tanz = \frac{1}{2}(1 - i)$ prove that $z = \frac{1}{2} tan^{-1} 2 + \frac{i}{4} log\left(\frac{1}{5}\right)$ (6)

b) Reduce the matrix to normal form hence find its rank $\begin{bmatrix} 2 & -4 & 3 & 0 \\ 1 & -2 & 1 & 2 \\ 0 & 1 & -1 & 1 \\ 4 & -7 & 4 & 5 \end{bmatrix}$ (6)

c) If u = $sin^{-1}\left\{\frac{x^{1/4}+y^{1/4}}{x^{1/5}+y^{1/5}}\right\}$, show that (8)

$$x^2 \frac{\partial^2 u}{\partial x^2} + 2xy \frac{\partial^2 u}{\partial xy} + y^2 \frac{\partial^2 u}{\partial x^2} = \frac{tanu}{400}(tan^2 u - 19)$$

Q.No 3) a) Test the consistency and if possible solve the equations

$2x - y - z = 2$, $x + 2y + z = 2$, $4x - 7y - 5z = 2$ (6)

b) Find all the stationary values of $x^3+3xy^2-15x^2-15y^2+72x$ (6)

c) If coshx = secθ, Prove that

(i) x = log (secθ + tanθ) (ii) $\theta = \frac{\pi}{2} - 2tan^{-1}(e^{-x})$ (8)

Q.No.4) a) If $u = xy^2 + e^{xy^2}$ Prove that $\frac{\partial^2 u}{\partial x \partial y} = \frac{\partial^2 u}{\partial y \partial x}$ (6)

b) Prove that $\text{Log}\left[\frac{(a-b)+i(a+b)}{(a+b)+i(a-b)}\right] = i\left(2n\pi + tan^{-1}\frac{2ab}{a^2-b^2}\right)$ (6)

c) Solve the following system of equation by Jacobi method (8)

$4x+y+3z = 17$, $x+5y+z = 14$, $2x-y+8z = 12$

Q.No.5) a) Show that $\cos^6\theta - \sin^6\theta = \frac{1}{16}[\cos 6\theta + 15\cos 2\theta]$ (6)

b) Find a and b such that $\lim_{x\to 0} \frac{a\sin^2 x + b\log\cos x}{x^4} = \frac{1}{2}$ (6)

c) If y = cos(mlogx), show that

$$x^2 y_{n+2} + (2n+1)xy_{n+1} + (m^2+n^2)y_n = 0$$ (8)

Q.No.6) a) Are the vectors X_1 =[1,3,4,2], X_2 =[3,-5,2,6] , X_3 =[2,-1,3,4] linearly dependent?

If so, express X_1 as a linear combination of the others (6)

b) If $f(x^2y^3,\ z-3x) = 0$, Prove that $3x\frac{\partial z}{\partial x} - 2y\frac{\partial z}{\partial y} = 9x$ (6)

c) Fit a second degree parabola to the following data (8)

x	-2	-1	0	1	2
y	1	1.8	1.3	2.5	6.3

F.E. /SEM I (CBSGS) / Applied Physics / MAY 2018

Q. P. Code: 39777

Time: 2 hours | Marks: 60

Note: Q.1 is compulsory
Attempt any three from Q.2 to Q.6
Assume suitable data if necessary, (Avogadro's No= 6.02×10^{26} per kg mole)

		Marks
Q.1	Attempt **any five**	
a	Identify crystal structure if its density is 9.6×10^2 kg/m^3 and lattice constant is 4.3 Angstrom. (atomic weight 23)	3
b	Explain the concept of hole? In Intrinsic semiconductor if number of electrons in conduction band is "x" find the number of holes in valence band	3
c	Write the advantages of solar cell	3
d	What is meant by active and passive dielectrics?	3
e	Define the terms permeability, relative permeability and susceptibility with reference to magnetic materials.	3
f	Explain Frankle defect in crystal imperfections.	3
g	In Piezo electric Oscillator what is the role of resonance?	3
Q.2		
a	Draw the unit cell of HCP. Derive (i) atoms/ unit cell (ii) atomic radius (iii) APF	8
b	Explain the term "Ligancy" why certain ligancies are not possible? Calculate critical radius ratio for Ligancy 3.	7
Q.3		
a	What is the term "Hysteresis"? Draw Hysteresis loop explain various important point on it. What is the technical significance of area enclosed under it? For a transformer which kind of material will you prefer the one with small Hysteresis loop area or the big one?	8
b	Silicon has the same crystal structure as of diamond. Its density is 2.33×10^3 kg/m^3 and atomic weight 28.9. Calculate atomic radius and lattice constant	7
Q.4		
a	Draw the following [120], (100) , (001), [121], [210]	5
b	What is Fermi level? Draw suitable diagrams to show its position in intrinsic semiconductor, p and n type semiconductor. Also draw its variation with temperature in p type.	5
c	Describe various polarization mechanisms in dielectrics.	5
Q.5		
a	State and derive Bragg's Law	5
b	Describe the Hall effect experiment to find the type of extrinsic semiconductor with proper labelled diagram	5
c	A hall of dimension 20 x 15x 10 m^3 has average absorption coefficient 0.1. Find the reverberation time. If a curtain cloth of 100m^2 is suspended at the centre of the hall with absorption coefficient 0.66, find the change in reverberation time	5
Q.6		
a	Explain Ohm's law for magnetic circuit. Write at least 2 points as comparison with electric circuit	5
b	What is Cavitation? Write its applications(any three)	5
c	The Hall coefficient for a specimen is given as 3.66×10^{-4} m^3 /C. Its resistively is 8.93×10^{-3} Ω m. Find its μ and n.	5

****

FE / SEM-II / CBSGS / MAY 2018 / Applied chemistry-I

Q.P. Code :38691

[Time: 2 Hours] **[Marks: 60]**

Please check whether you have got the right question paper.

N.B:
1. Question No.1 is Compulsory.
2. Attempt any **three** questions from remaining **five** questions.
3. Figures to the right indicate Full marks.
4. All questions carry equal marks.
5. Atomic weights: - H=1, C=12, N=14, O=16, S=32, Cl=35.5, Ba=137.3, Ca=40. Mg=24, Na=23.

1. Answer **any five** from the following:- **15**
   a) Galvanization of iron articles is preferred to tinning. Give reason.
   b) What are Fuels? Give characteristics of good fuels.
   c) Give Composition, Properties and Uses of **Woods Metal**.
   d) What are composite materials? Define matrix and dispersed phase.
   e) Explain the principal of green chemistry 'Prevention of waste'.
   f) Mention three important constituents of paints with their function.
   g) 1.85 g of the same coal sample in a Bomb-calorimeter experiment gave 0.28 g $BaSO_4$. Calculate percentage of S in the coal sample.

2. a) Explain the mechanism of following types of corrosion:- **06**
   i) Waterline corrosion ii) Pitting corrosion
   b) What is Cracking of hydrocarbons? Explain Fixed bed catalytic cracking. **05**
   c) Calculate % Atom Economy for the following reaction with respect to toluene **04**
   $C_6H_6 + CH_3Cl \xrightarrow{AlCl_3} C_6H_5CH_3 + HCl$
   Benzene Methyl Chloride Toluene

3. a) A fuel sample has the following composition: H_2=60%, C_2H_2=10%, CO=8%, CO_2 = 1 %, and rest is nitrogen. Calculate the volume of oxygen and air required for complete combustion of $5m^3$ of fuel. **06**
   b) Explain Conventional and Greener route for synthesis of Adipic acid. Mention the green Chemistry principle involved. **05**
   c) How do the following factors related to nature of environment affect corrosion? **04**
   i) P^H of medium ii) Moisture

4. a) What are alloys? Explain the purpose of making alloys. **06**
   b) What is the principle of cathodic protection? Explain impressed current protection method. **05**
   c) Explain laminar composites with example. **04**

Turn Over

5. a) Write informative note on Biodiesel. **06**

b) What is powder metallurgy? Discuss any two methods for manufacturing metal powders. **05**

c) Write a note on dispersed phase of composite materials. **04**

6. a) What are the methods of metal coatings? Explain electroplating of metals in detail. **05**

b) A coal sample contains, C=78%, O=12%, H=4%, S=0.5%, and Ash= 5.5%. Calculate the GCV and NCV of given coal sample. **05**

c) What is compaction in powder metallurgy? Explain cold pressing and roll pressing methods in detail. **05**

Sem-I (CBSGS) / Engineering Mechanics / May-2018

Q. P. Code: 27956

(3Hours)

Maximum Marks : 80

N.B.1. Question No. 1 is Compulsory.
2. Answer any Three more questions out of the remaining Five questions.
3. Assume any suitable data wherever required but justify the same.
4. Figures to the right indicate full mark
5. Take g= 9.81m/s^2

Q1(a) A system of four forces acting on a body is shown in fig. Determine their resultant. [4]

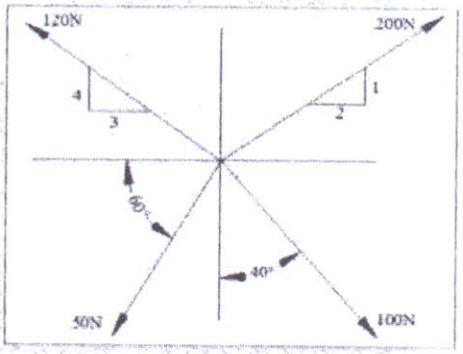

(b) A smooth sphere of wt. 500N is supported in contact with smooth vertical wall by a string fastened to a point on its surface, the end being attached to a point on the wall. If the length of the string AC is equal to the radius of sphere OC, determine the tension in the string and reaction at the wall. [4]

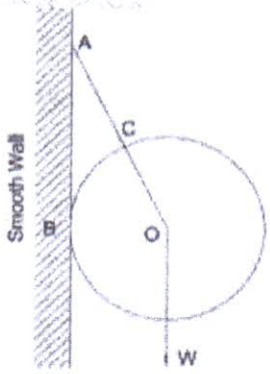

(c) Explain: (i)Laws of friction (ii) Angle of repose [4]

94EE609B04F642FF54CC46720C445212

d) A particle starts from rest at t=0 and travels in one particular direction. Its rectilinear motion is given by the relation **v = (9t²-18t)** m/s where t is in seconds. Determine the time at which the particle reaches its maximum displacement. Also determine its displacement and acceleration at t=2 sec

[4]

e) A car travelling at a speed of 25m/s suddenly applies brakes and comes to stop after skidding 100 m. Determine

(i) Time need to stop the car

(ii) Coefficient of friction between the tyre and the road

[4]

Q2a) A cylinder 1.5m in diameter & weight 1000N is a supported by a beam AB of length 6m & weight 400N as shown in fig. Neglecting friction determine (i) Wall reaction at D (ii) Tension in the cable BC (iii) Reaction at hinge support A.

[8]

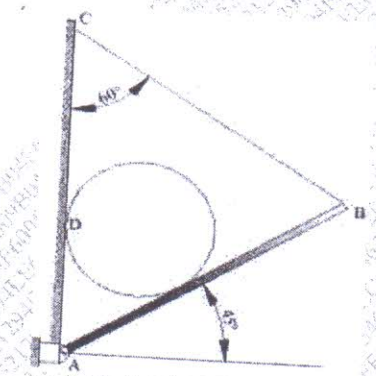

b) Determine the magnitude, direction and position of the single resultant force. Also replace the given system by a Force-Couple at B.

[6]

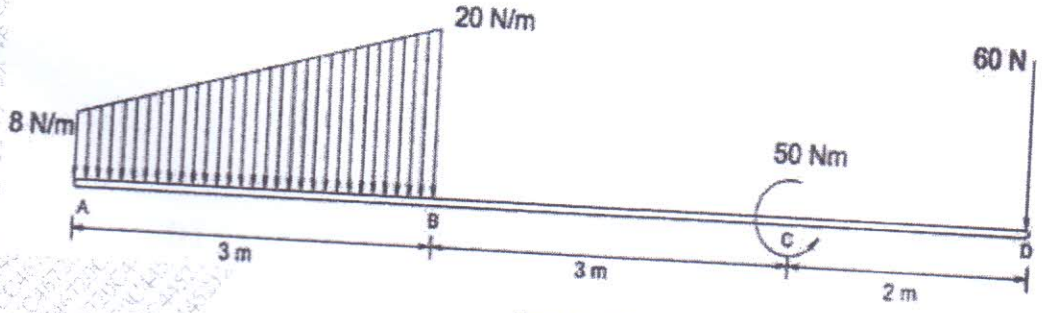

94EE609B04F642FF54CC46720C445212

Q4.a) Find support reactions at A and B for the beam loaded as shown in figure. A is hinged and B is roller.

[8]

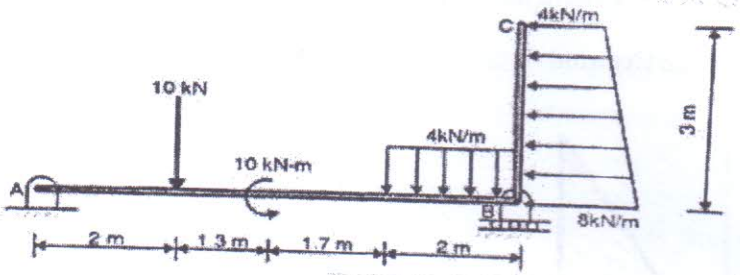

b) A ball thrown with speed of 12 m/s at an angle of 60° with a building strikes the ground 11.3 m horizontally from the foot of the building as shown. Determine the height of the building. [6]

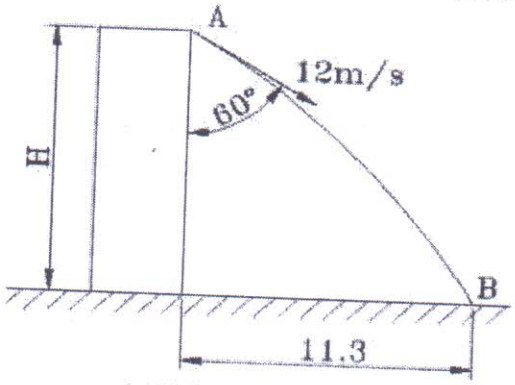

c) Velocity of point A on rod is 20 m/s at the instant shown in figure. Locate ICR for the rod and determine velocity of point B on the rod.

[6]

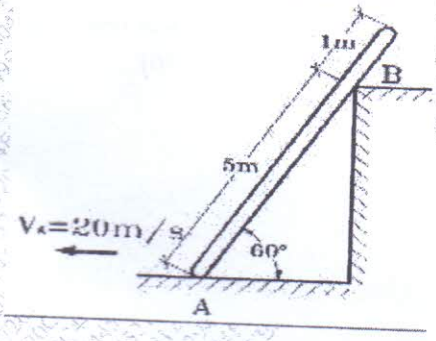

Q5a) Find the magnitude and nature of forces in members AE, CE and CD by method of sections and rest of the members by method of joints. A and B are supported as shown. Length AC=AE=CE=BE=4m and angle ACB=90^0 [8]

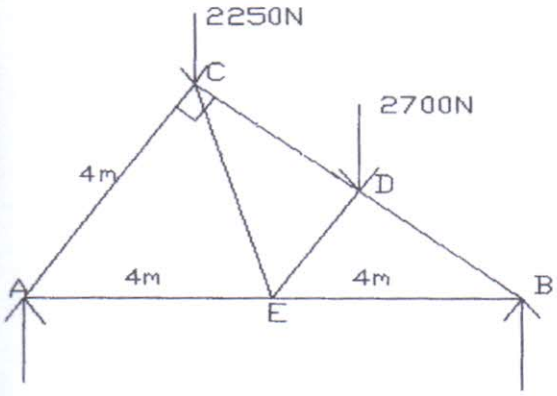

b) A train leaves station A and attains speed at the rate of $4m/s^2$ for 6 seconds and then $6m/s^2$ till it reaches a velocity of 48m/s. Further the velocity remains constant,then brakes are applied giving the train a constant deceleration stopping it in 6 seconds. If the total running time between the two stations is 40sec. Plot a-t graph, v-t graph and determine the distance between the two stations. [6]

c) The crank OQ of a slider crank mechanism is rotating at constant speed of 30 rpm clockwise about fixed point O. Determine the velocity of the piston P at the given instant. [6]

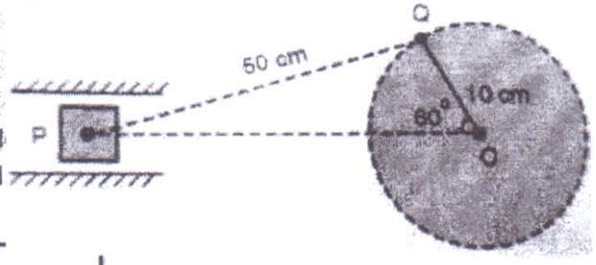

Q6a) What force P must be applied to the weight under 1000 kN block A? The angle of friction at al

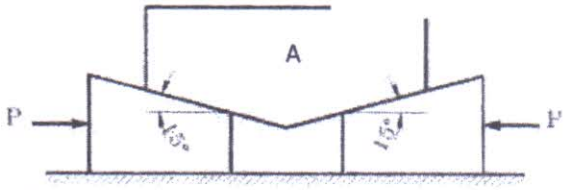

b) A force of 600N acts along PQ, P(4,5,-2) and Q (-3,1,6)m. Calculate its moment about a point A(3,2,0) . [4]

c) A car starts from rest and moves along a circular path having a radius of 20m. Its speed increases at a uniform rate of 0.5 m/s^2. Find the time from the start and distance travelled when its resultant acceleration becomes 1.5 m/s^2. [4]

d) Blocks A and B of mass 600kg and 1200kg respectively are connected by a string passing over a smooth pulley. Neglect mass of pulley. If coefficient of kinetic friction between the block A and the inclined surface is 0.2, determine the acceleration of block A and block B. [4]

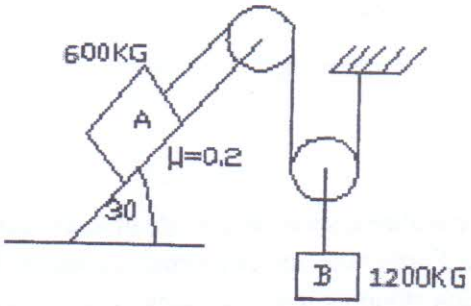

****

Sem-I (CBSGS) / Basic, Electrical & Electronics Engg. / May-2018

Q.P.Code: 40160

[3 Hours] **[Total Marks: 80]**

N.B. : 1. **Question 1 is compulsory.**
2. Solve **any three** from remaining.
3. Assume suitable data if required and justify it.

Q.1) Solve **[20]**

a. Find Rab using star –delta transformation [3]

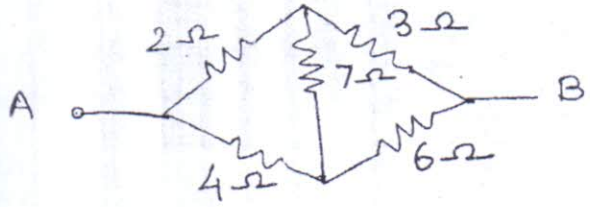

b. Use superposition principle to find current through R1 [3]

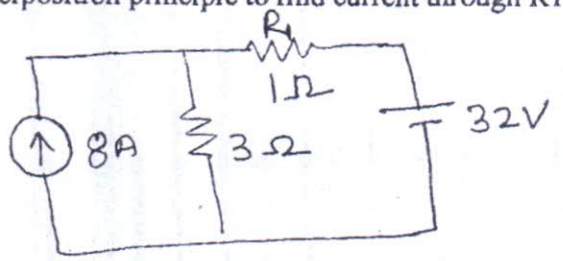

c. An alternating current of frequency 50Hz has a maximum value of 100 A. Calculate its value1/600 seconds after the instant the current is zero & its value decreasing afterwards [3]

d. Find the average & rms value of the given waveform [3]

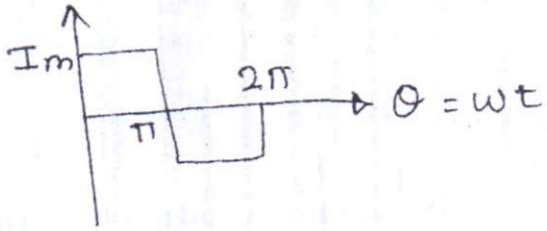

e. Two wattmeters are connected to measure power consumed by 3-phase star connected load. What is the power factor of load if [2]
1. Both wattmeters show equal reading
2. Only one wattmeter shows reading

f. Compare Ideal & Practical transformer [4]

g. Draw input & output voltage waveforms of a centre tapped rectifier. **[2]**

Q.2)

a. Using nodal analysis ,find current through 0.05 Ω [6]

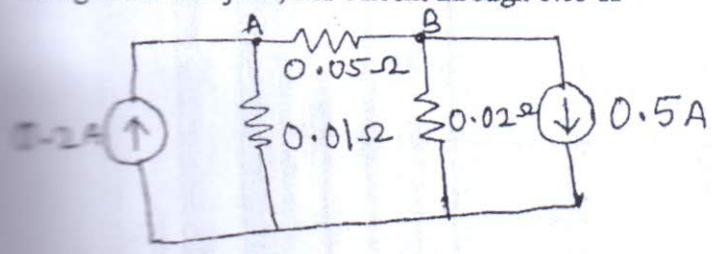

Turn Over

b. A resistor R in series with capacitor C is connected to 50Hz, 240V source. Find the value of C so that R absorbs 300W. Voltage across R is 100V **[8]**

c. A single phase transformer has 350 primary & 1050secondary turns. The primary is connected to a 400V, 50 Hz supply. If net cross sectional area of core is 50 cm^2 find i) the max. Value of flux density in the core ii) the voltage induced in secondary winding **[6]**

Q.3)

a. Find I, I_1, I_2 in the given circuit. **[8]**

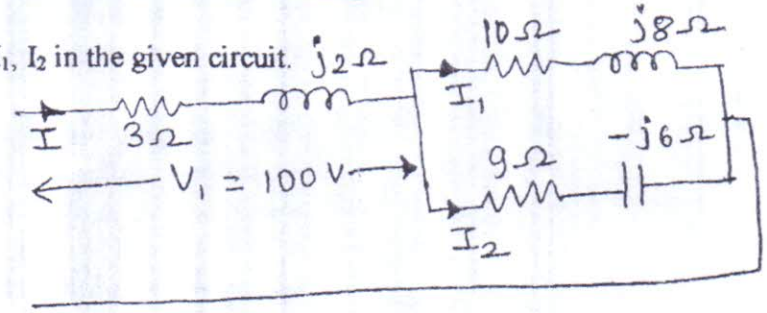

b. Obtain equivalent circuit of a 200/400V, 50Hz single phase transformer from the following test data **[6]**

OC test:	200V	0.7A	70W	(on lv side)
SC test:	15V	10A	85W	(on hv side)

c. Draw and explain the output characteristic of CE transistor configuration **[4]**

d. Explain capacitor filter. **[2]**

Q.4)

a. Using source transformation, find V_1, V_2 in the circuit shown **[7]**

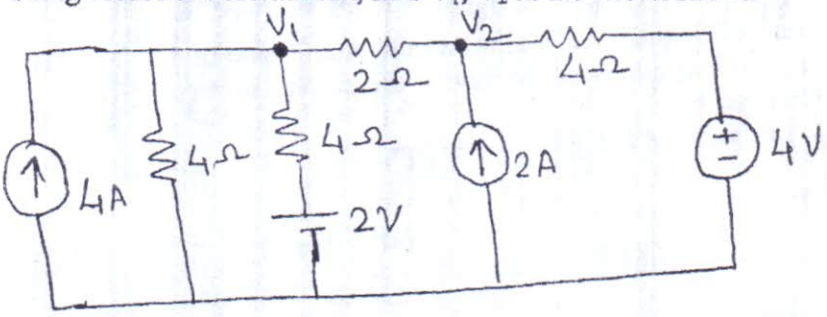

b. A balanced star connected load of (8+j6)Ω per phase is connected to a three phase 400V supply. Find the line current & power factor. **[4]**

c. An iron choke coil takes 4A current when connected to a 20V dc supply & takes 5A from 65V, 50Hz ac supply. Determine R & L of the coil. **[5]**

d. Draw and explain the working of full wave rectifier in detail **[4]**

Q.5)

a. Det. The value of R_L for max. Power at the load. Calculate Pmax. **[8]**

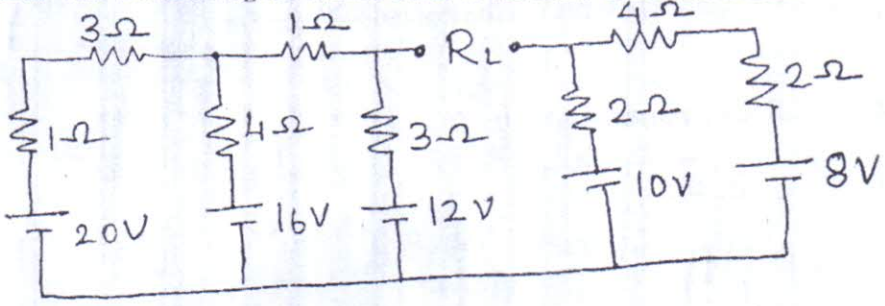

Turn Over

b. Draw admittance triangle between terminals A & B labelling with its sides with appropriate values & units if $X_L = 4\Omega$ $X_C = 8\Omega$ [5]

c. The wattmeter reads iron losses in OC test & copper losses in SC test of a transformer. Justify. [7]

Q.6)

a. Draw Norton's equivalent source across AB & find current through 12Ω resistor. [7]

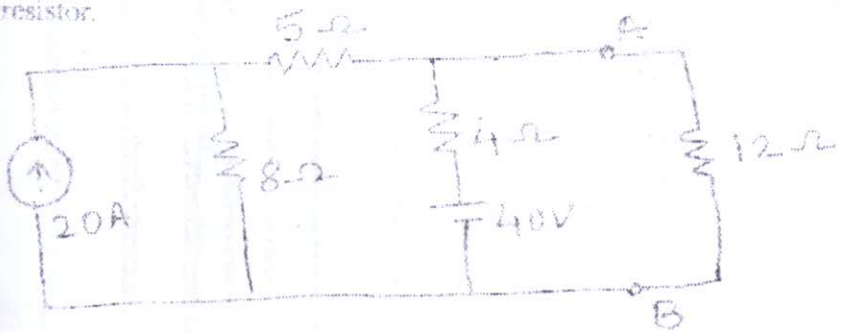

b. A circuit consist of a resistance of 4Ω & inductance of 0.5H & a variable capacitance in series across a 100V, 50Hz supply. Calculate [7]

i) Value of capacitance to produce resonance
ii) Voltage across capacitor
iii) Q factor of the circuit

c. In a 3-phase star connected load, show that $V_L = \sqrt{3}V_{PH}$ & $I_L = I_{PH}$ [6]